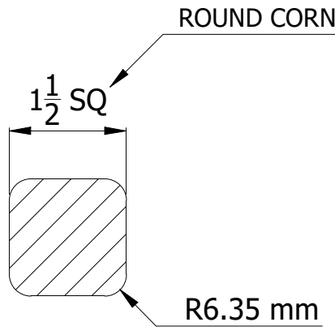

SECTION A-A

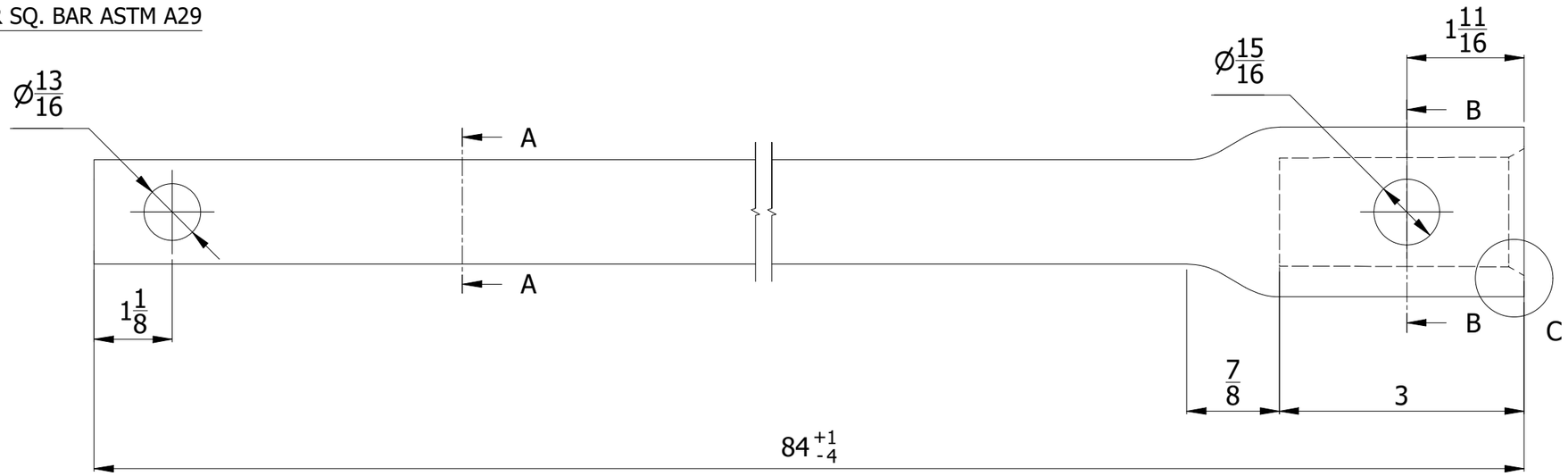

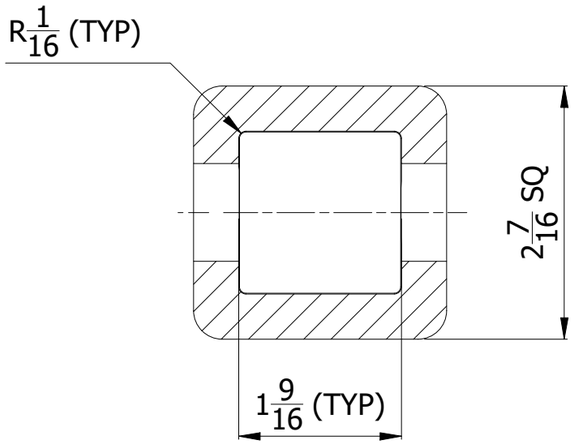

SECTION B-B

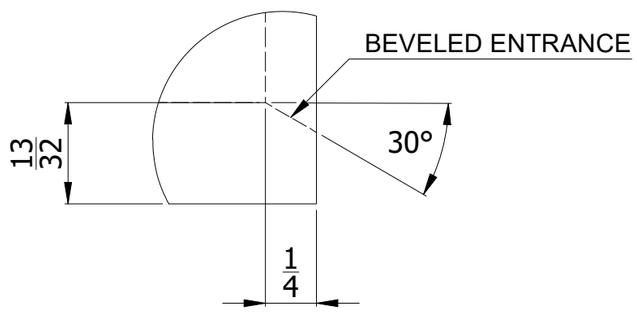

DETAIL C
TYP AT 4 LOCATIONS

NOTES:
1. HOT DIP GALVANIZED AS PER ASTM A-153
2. SHAFT MATERIAL - HOT ROLLED RCS (ROUND CORNERED SQUARE) SOLID STEEL BARS; MINIMUM YIELD STRENGTH 90KSI.
3. MINIMUM TENSILE STRENGTH - 70 KPI
4. INSTALLATION TORQUE - 7,000 FT-LBS
5. SOCKET IS UPSET FORGED
6. COMES WITH 3/4" x 3" A325 GALVANIZED STRUCTURAL BOLT AND 3/4" A563 GRADE A GALVANIZED JAM NUT
7. ALL DIMENSIONS ARE IN INCHES UNLESS OTHER SPECIFIED

THIS DRAWING CONTAINS CONFIDENTIAL INFORMATION AND IS THE EXCLUSIVE PROPERTY OF ORBIS MANUFACTURING

ORBIS

DRAWN	MSM	DATE	26-07-2022
APPROVED	DMM	DATE	01-08-2022
REVISION	DMM	R1.1	20-02-2024

DRAWING NUMBER
ARCS15EXT7-7K-US

DESCRIPTION
ANCHOR EXTENSION 7' 7K FT-LBS
INSTALLATION TORQUE 70K LBS TENSILE
RCS SHAFT 1.5"-US